TEDS36-B: 36" WIDE DRY STORAGE DRAWER

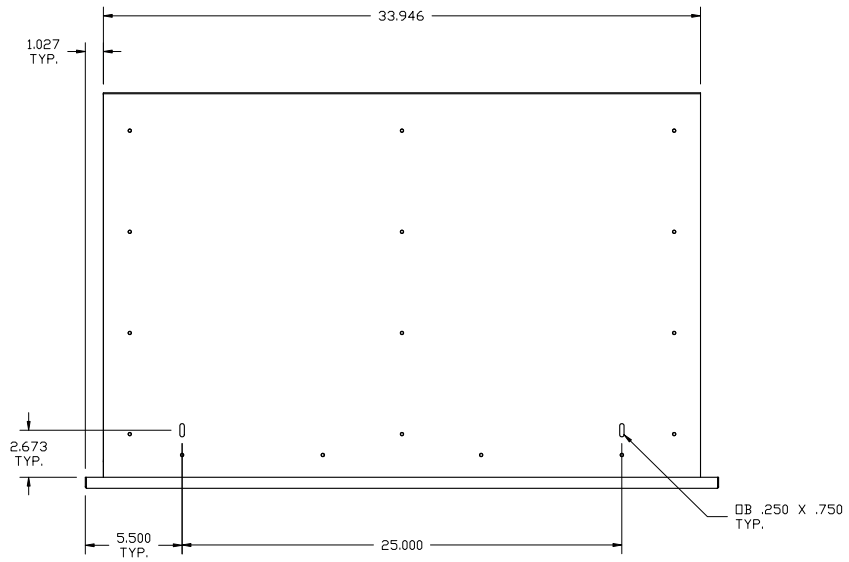

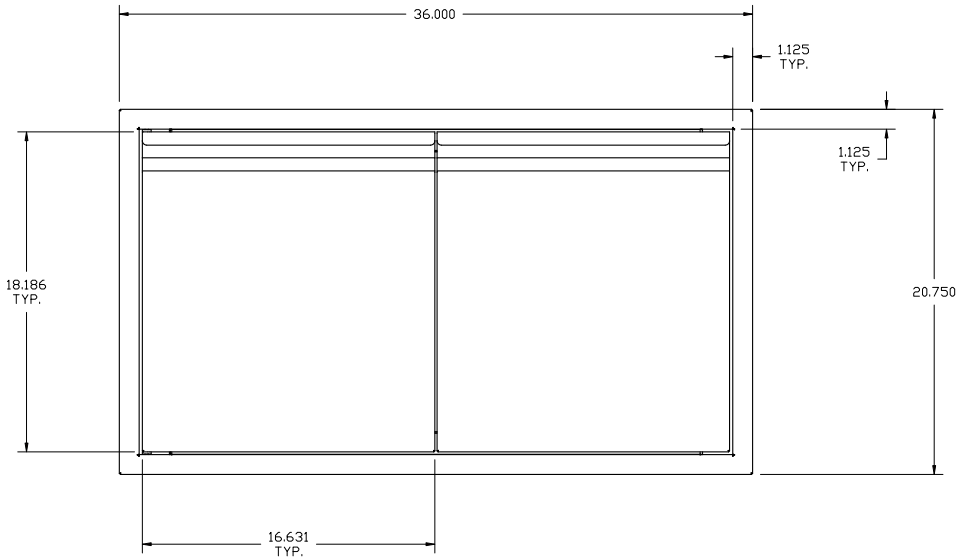

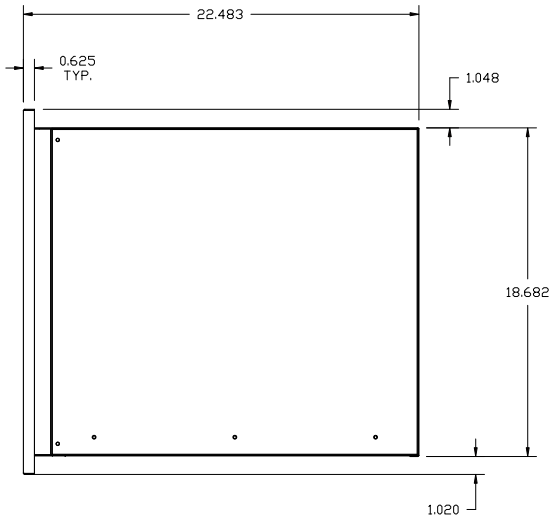

LAST UPDATE: 02/13